CONTRACT PLANS COMPONENTS
DITCH PAVING PLANS

CONTRACT PLANS

105TH ROAD CONCRETE DITCH PAVING

SUWANNEE COUNTY, FLORIDA

DITCH PAVEMENT PLANS

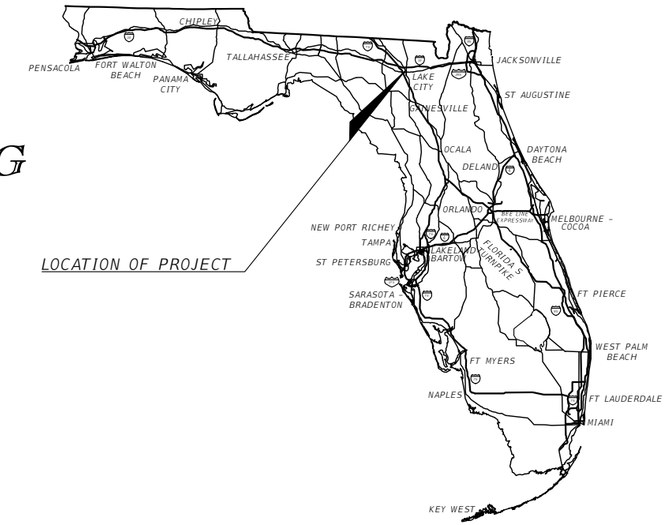

INDEX OF ROADWAY PLANS

SHEET NO.	SHEET DESCRIPTION
1	KEY SHEET
2	SIGNATURE SHEET
3	PROJECT LOCATION
4	NOTES
5	DITCH PAVEMENT DETAILS
6	KEYFOLD DETAIL
7 - 8	DITCH CROSS SECTIONS
9	TRAFFIC CONTROL PLAN

470 FEET

THESE PLANS WERE PREPARED
FOR THE SUWANNEE COUNTY
BOARD OF COMMISIONERS

DITCH PAVING PLANS
ENGINEER OF RECORD:
JAMES H. PITMAN JR
P.E. NO.: 42035
NORTH FLORIDA PROFESSIONAL SERVICES, INC.
P.O. BOX 3823
LAKE CITY, FLORIDA 32056
CERTIFICATE OF AUTHORIZATION NO.: 29011

GOVERNING CRITERIA:
Florida Department of Transportation; Manual of Uniform Minimum Standards for Design, Construction and Maintenance for Streets and Highways (2018 Edition)

GOVERNING STANDARD PLANS:
Florida Department of Transportation, FY2020-21 Standard Plans for Road and Bridge Construction and applicable Interim Revisions (Irs).

Standard Plans for Road Construction and associated Irs are availalbe at the following website:

http://www.fdot.gov/design/Standardplans.shtm

APPLICABLE IRs:

Standard Plans for Bridge Construction are included in the Structures Plans Component.

GOVERNING STANDARD SPECIFICATIONS:
Florida Department of Transportation, July, 2020 Standard Specifications for Road and Bridge Construction are available at the following website:
http://www.fdot.gov/programmanagement/Implemented/SpecBooks

THE OFFICIAL RECORD OF THIS SHEET IS THE ELECTRONIC FILE DIGITALLY SIGNED AND SEALED UNDER RULE 61G15-23.004, F.A.C.

FISCAL YEAR	SHEET NO.
22	1

JAMES H. PITMAN, JR.
LICENSE
No.42035
STATE OF
FLORIDA
PROFESSIONAL ENGINEER

THIS DOCUMENT HAS BEEN DIGITALLY SIGNED AND SEALED BY:
James H Pitman
2022.02.02 10:51:09 -05'00'
ON THE DATE ADJACENT TO THE SEAL

PRINTED COPIES OF THIS DOCUMENT ARE NOT CONSIDERED SIGNED AND SEALED. THE SIGNATURE MUST BE VERIFIED IN THE ELECTRONIC DOCUMENTS.

NORTH FLORIDA PROFESSIONAL SERVICES INC.
P.O. BOX 3823
LAKE CITY, FL 32056
CERTIFICATE OF AUTHORIZATION: 29011
JAMES H. PITMAN, JR, P.E. NO. 42035

THE ABOVE NAMED PROFESSIONAL ENGINEER SHALL BE RESPONSIBLE FOR THE FOLLOWING SHEETS IN ACCORDANCE WITH RULE 61G15-23.004, F.A.C.

INDEX OF ROADWAY PLANS

SHEET NO.	SHEET DESCRIPTION
1	KEY SHEET
2	SIGNATURE SHEET
3	PROJECT LOCATION
4	NOTES
5	DITCH PAVEMENT DETAILS
6	KEYFOLD DETAIL
7 - 8	DITCH CROSS SECTIONS
9	TRAFFIC CONTROL PLAN

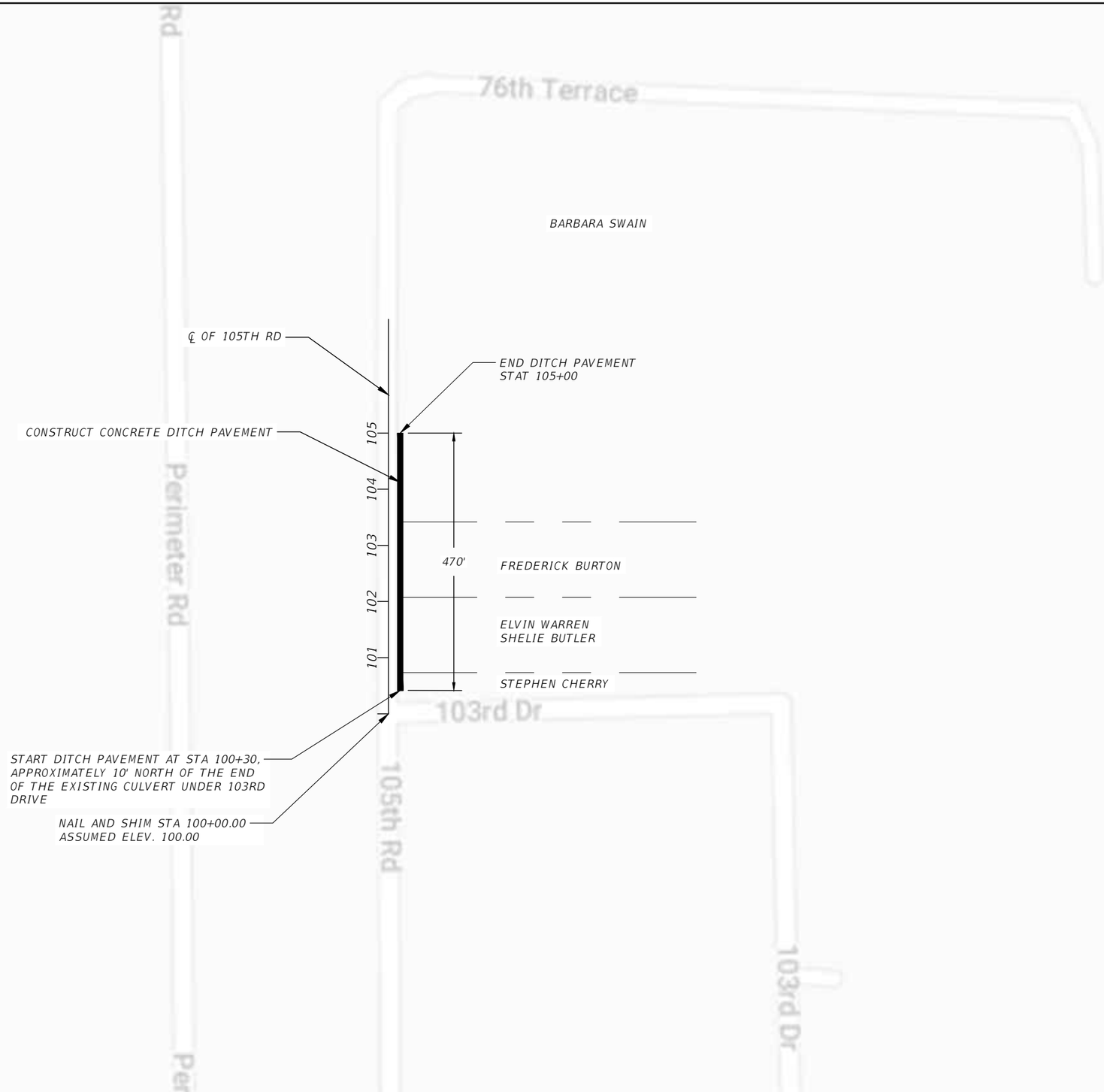

REVISIONS			
DATE	DESCRIPTION	DATE	DESCRIPTION

JAMES H. PITMAN, JR
P.E. LICENSE NUMBER 42035
NFPS
P.O. BOX 3823
LAKE CITY, FLORIDA 32056
CERTIFICATE OF AUTHORIZATION 29011

SUWANNEE COUNTY

ROAD NO.	COUNTY	FINANCIAL PROJECT ID
105TH ROAD	SUWANNEE	

PROJECT LOCATION

SHEET NO.
3

THE OFFICIAL RECORD OF THIS SHEET IS THE ELECTRONIC FILE DIGITALLY SIGNED AND SEALED UNDER RULE 61G15-23.004, F.A.C.

GENERAL NOTES

1. THE CONTRACTOR SHALL VERIFY ALL EXISTING CONDITIONS AND DIMENSIONS AT THE JOB SITE TO INSURE THAT ALL NEW WORK WILL FIT IN THE MANNER INTENDED ON THE PLANS. SHOULD ANY CONDITIONS EXIST THAT ARE CONTRARY TO THOSE SHOWN ON THE PLANS, THE CONTRACTOR SHALL NOTIFY THE ENGINEER OF SUCH DIFFERENCES IMMEDIATELY AND PRIOR TO PROCEEDING WITH THE WORK.

2. THE CONTRACTOR SHALL MAINTAIN THE CONSTRUCTION SITE IN A SECURE MANNER. ALL OPEN TRENCHES AND EXCAVATED AREAS SHALL BE PROTECTED FROM ACCESS BY THE GENERAL PUBLIC.

3. ANY PUBLIC LAND CORNER WITHIN THE LIMITS OF CONSTRUCTION SHALL BE PROTECTED. IF A CORNER MONUMENT IS IN DANGER OF BEING DESTROYED AND HAS NOT BEEN PROPERLY REFERENCED, THE CONTRACTOR SHOULD NOTIFY THE ENGINEER.

4. THE SITE IS LOCATED IN SECTION 18, TOWNSHIP 2 SOUTH, RANGE 14 EAST, SUWANNEE COUNTY, FLORIDA.

5. THE CONTRACTOR SHALL IMPLEMENT ALL COMPONENTS OF HIS EROSION AND SEDIMENTATION CONTROL PLAN PRIOR TO ANY EARTH DISTURBING ACTIVITIES. ALL COMPONENTS SHALL BE MAINTAINED BY THE CONTRACTOR UNTIL ALL VEGETATION IS ESTABLISHED, THE ENTIRE PROJECT AREA IS STABILIZED AND THE OWNER HAS ACCEPTED OPERATION AND MAINTENANCE. ALL SLOPES SHALL BE SODDED AND SLOPES STEEPER THAN 3:1 SHALL BE STAPLED SOD.

6. ALL DISTURBED AREAS NOT SODDED SHALL BE SEEDED WITH A MIXTURE OF LONG-TERM VEGETATION AND QUICK GROWING SHORT-TERM VEGETATION FOR THE FOLLOWING CONDITIONS. FOR THE MONTHS FROM SEPTEMBER THROUGH MARCH, THE MIX SHALL CONSIST OF 70 POUNDS PER ACRE OF LONG-TERM SEED AND 20 POUNDS PER ACRE OF WINTER RYE. FOR THE MONTHS OF APRIL THOUGH AUGUST, THE MIX SHALL CONSIST OF 70 PER ACRE OF LONG-TERM SEED AND 20 POUNDS PER ACRE OF MILLET.

7. THE LOCATION OF THE UTILITIES SHOWN IN THE PLANS ARE APPROXIMATE ONLY. THE EXACT LOCATION SHALL BE DETERMINED BY THE CONTRACTOR DURING CONSTRUCTION. CONTRACTOR SHALL PROTECT ALL UTILITIES WITHIN THE PROJECT AREAS. CONTRACTOR SHALL CONTACT 811 OR 1-800-432-4770 AT LEAST 2 BUSINESS DAYS BEFORE BEGINNING CONSTRUCTION.

CONTACT PHONE NUMBERS:
CITY OF LIVE OAK, GEORGE CURTIS, (386) 362-2276
WIDSTREAM COMMUNICATION, DAVID JORDAN, (800) 289-1901

8. THE CONTRACTOR SHALL NOTIFY THE COUNTY ADMINISTRATOR AT LEAST 48 HOURS PRIOR TO BEGINNING OF CONSTRUCTION.

9. NO WORK SHALL BE PERFORMED ON SUNDAY OR COUNTY RECOGNIZED HOLIDAY WITHOUT A WRITTEN APPROVAL FROM THE COUNTY ADMINISTRATOR.

10. CLEARING AND GRUBBING AND ROUGH GRADING WILL BE PERFORMED BY COUNTY FORCES.

PAY ITEM NOTES

0102010000 - MAINTENANCE OF TRAFFIC - INCLUDES ALL ELEMENTS REQUIRED FOR THE TRAFFIC CONTROL PLAN, CONSTRUCTION STAKEOUT.

0104010030 - SEDIMENT BARRIER - INCLUDES SYNTHETIC BALES, STAKED SILT FENCE, AND OTHER ITEMS NECESSARY TO MINIMIZE EROSION AND PREVENT SEDIMENT FROM LEAVING THE PROJECT LIMITS AND/OR ENTERING INLETS & CULVERTS. QUANTITY PROVIDED IS TO BE PLACED ACCORDING TO CONTRACTOR'S EROSION CONTROL PLAN.

524129 - CONCRETE DITCH PAV'T, 4", REINFORCED - INCLUDES THE COST OF FILTER FABRIC, WELDED WIRE MESH, TOEWALLS, REBAR, CONTRACTION/EXPANSION JOINTS AND GALVANIZED KEYFOLD JOINTS.

0570010100 - PERFORMANCE TURF - INCLUDES DRESSING SHOULDERS; AND ALL SEED AND MULCHING REQUIRED FOR PROJECT. CONTRACTOR SHALL MAINTAIN ANY AREAS OF EROSION. CONTRACTOR SHALL BE RESPONSIBLE FOR WATERING AS NEEDED.

THE OFFICIAL RECORD OF THIS SHEET IS THE ELECTRONIC FILE DIGITALLY SIGNED AND SEALED UNDER RULE 61G15-23.004, F.A.C.

THIS ROAD IS A LOW VOLUME, LOW SPEED LOCAL ROAD.

DESIGN SPEED = 40 MPH

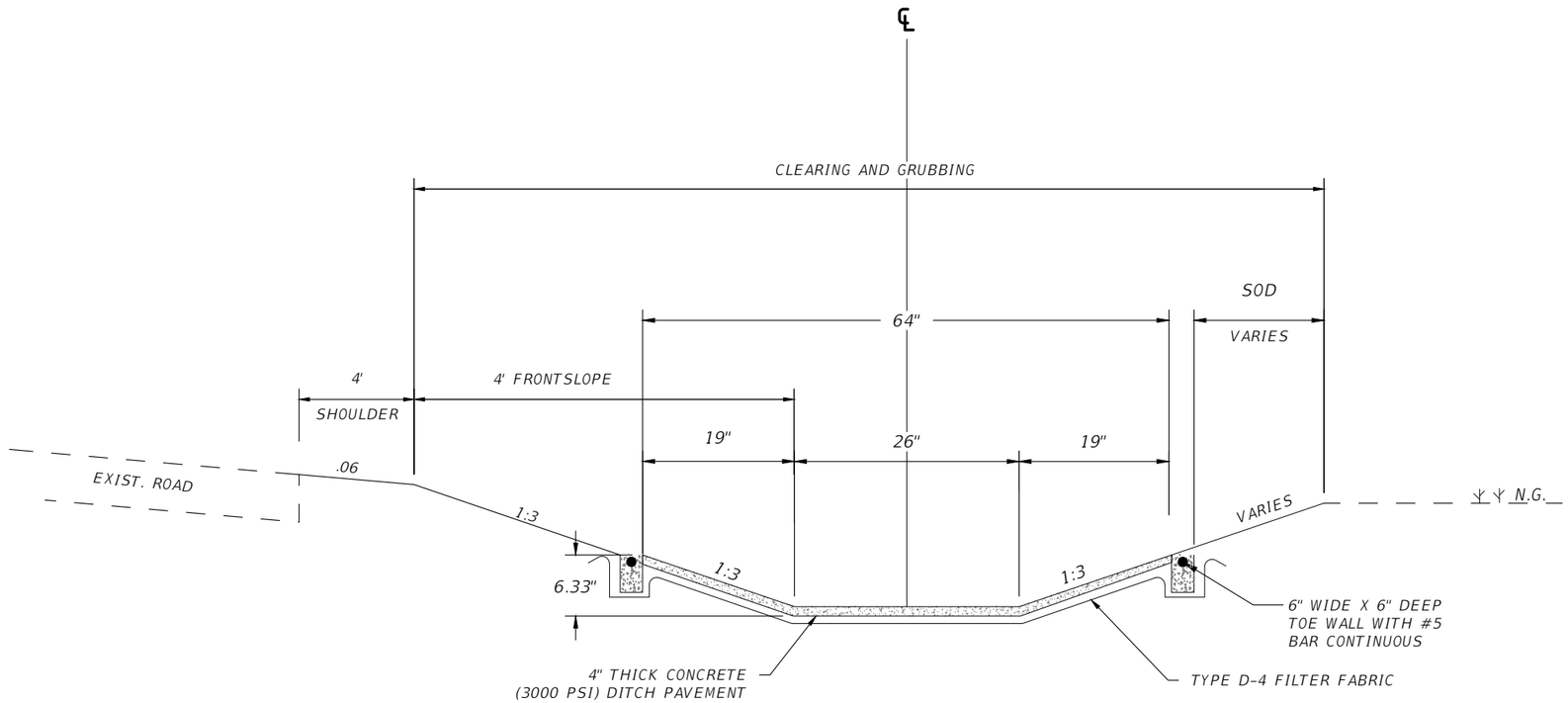

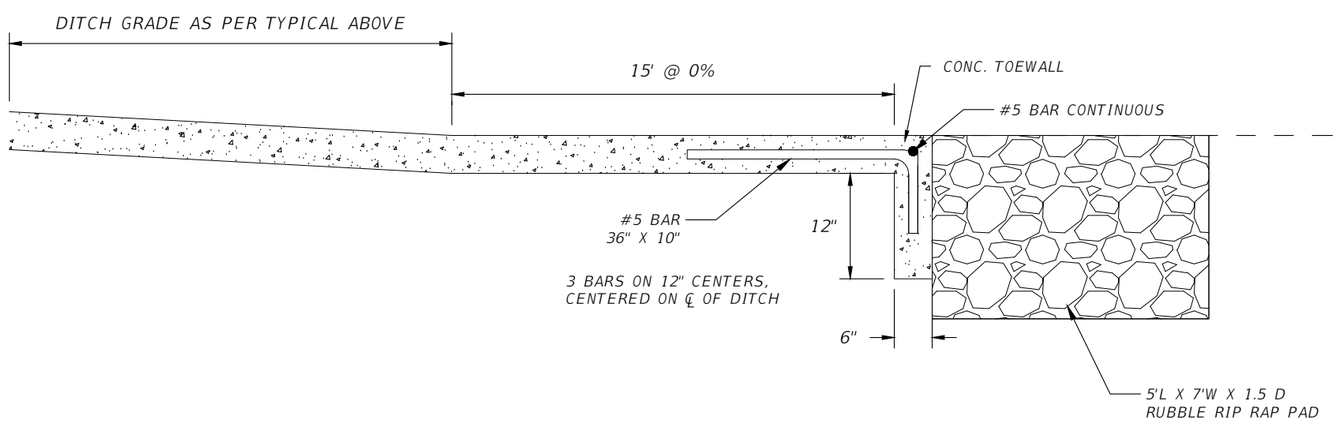

TOE WALL DETAIL

TO BE APPLIED AT ENDS OF DITCH PAVT.

GENERAL NOTES

1. SEE FDOT STANDARD PLANS 347, 524 AND 985.
2. CONSTRUCT A GALVANIZED KEYFOLD JOINT EVERY 10' ALONG DITCH PAVEMENT. SEE DETAILS ON SHEET 6
3. EXPANSION JOINTS WITH $\frac{1}{2}$" PREFORMED JOINT FILLER SHALL BE CONSTRUCTED AT INTERVALS OF NO MORE THAN 200'.
4. TOEWALLS ARE TO BE USED WITH ALL DITCH PAVING. SEE DETAILS THIS SHEET.
5. FILTER FABRIC IS REQUIRED UNDER ALL DITCH PAVEMENT. PLACE THE FILTER FABRIC DIRECTLY BENEATH THE PAVEMENT FOR THE ENTIRE LENGTH AND WIDTH OF THE PAVEMENT. SEE FDOT SPECIFICATION 985 FOR FABRIC REQUIREMENTS AND APPLICATION. CONST. OF FILTER FABRIC TO BE INCLUDED IN THE CONTRACT UNIT PRICE FOR DITCH PAVEMENT.
6. CONSTRUCT A, 4" DIAMETER WEEP HOLE IN THE CENTER OF THE DITCH BOTTOM; ON 10' CENTERS LONGITUDINALLY.
7. SODDING TO BE PAID UNDER CONTRACT UNIT PRICE FOR PERFORMANCE TURF, SY.
8. INSTALL 6 X 6 X10 WELDED WIRE MESH IN THE CONCRETE PAVEMENT, SUPPORTED EVERY 2'. COST OF WWM TO BE INCLUDED IN UNIT PRICE FOR DITCH PAVEMENT.
9. DITCH BOTTOM ELEVATION IS BASED ON ELEVATION OF EXISTING EDGE OF PAVEMENT.

THE OFFICIAL RECORD OF THIS SHEET IS THE ELECTRONIC FILE DIGITALLY SIGNED AND SEALED UNDER RULE 61G15-23.004, F.A.C.

REVISIONS			
DATE	DESCRIPTION	DATE	DESCRIPTION

JAMES H. PITMAN, JR
P.E. LICENSE NUMBER 42035
NFPS
P.O. BOX 3823
LAKE CITY, FLORIDA 32056
CERTIFICATE OF AUTHORIZATION 29011

SUWANNEE COUNTY

ROAD NO.	COUNTY	FINANCIAL PROJECT ID
105TH ROAD	SUWANNEE	

DITCH PAVEMENT DETAILS

SHEET NO. 5

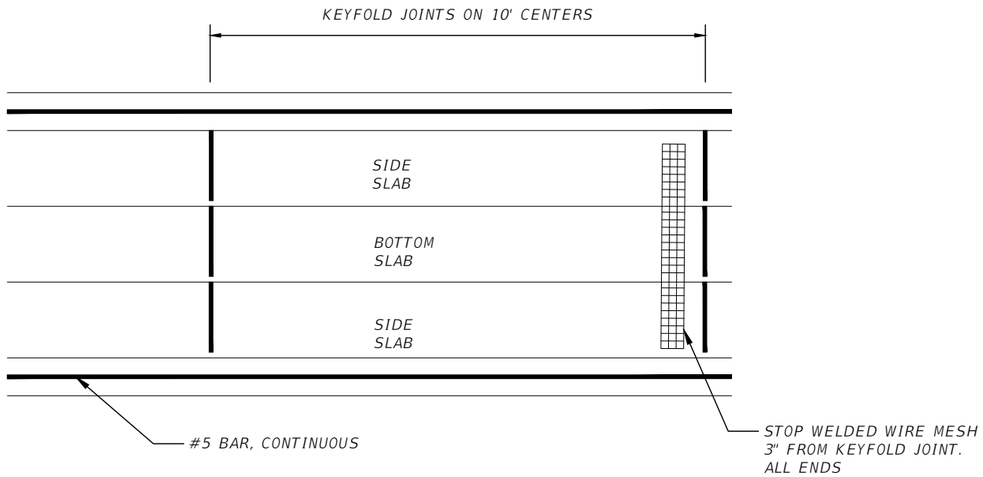

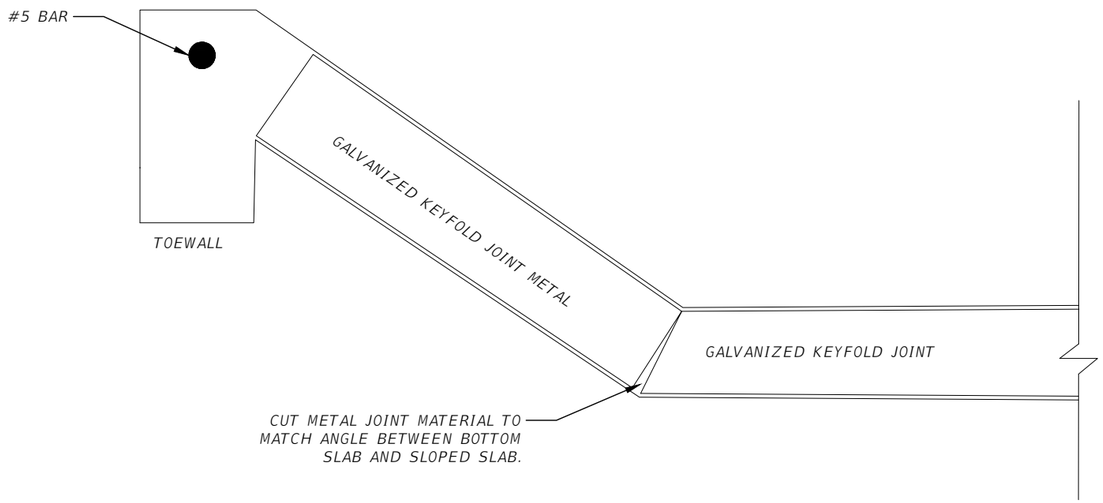

NOTE:
USE GALVANIZED KEYFOLD JOINTS, ON 10' CENTERS, ON THE BOTTOM SLAB AND SIDE SLABS.

THE OFFICIAL RECORD OF THIS SHEET IS THE ELECTRONIC FILE DIGITALLY SIGNED AND SEALED UNDER RULE 61G15-23.004, F.A.C.

REVISIONS			
DATE	DESCRIPTION	DATE	DESCRIPTION

JAMES H. PITMAN, JR
P.E. LICENSE NUMBER 42035
NFPS
P.O. BOX 3823
LAKE CITY, FLORIDA 32056
CERTIFICATE OF AUTHORIZATION 29011

SUWANNEE COUNTY

ROAD NO.	COUNTY	FINANCIAL PROJECT ID
105TH ROAD	SUWANNEE	

KEYFOLD DETAIL

SHEET NO. 6

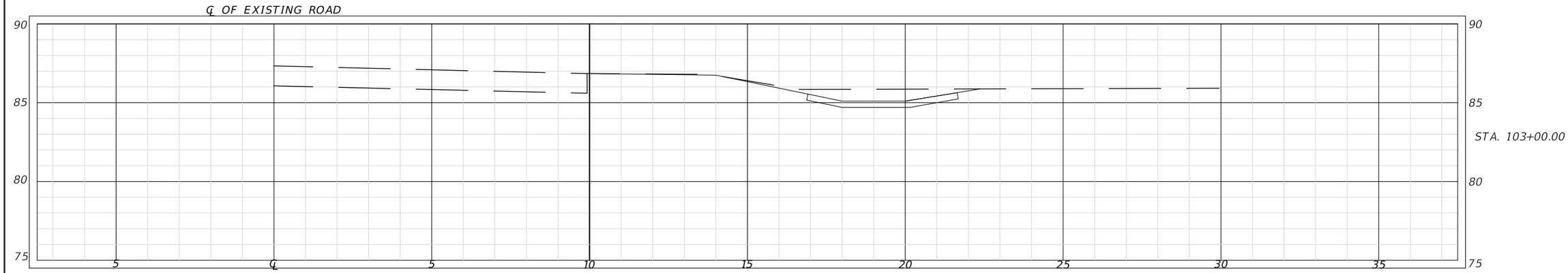

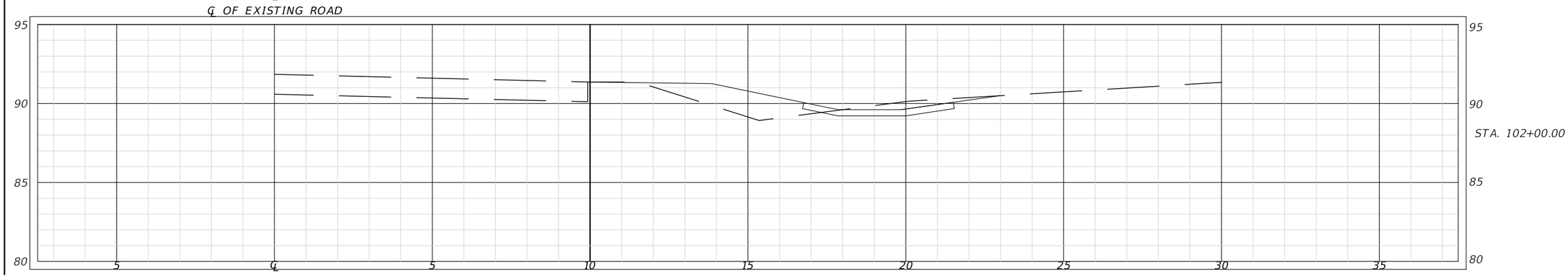

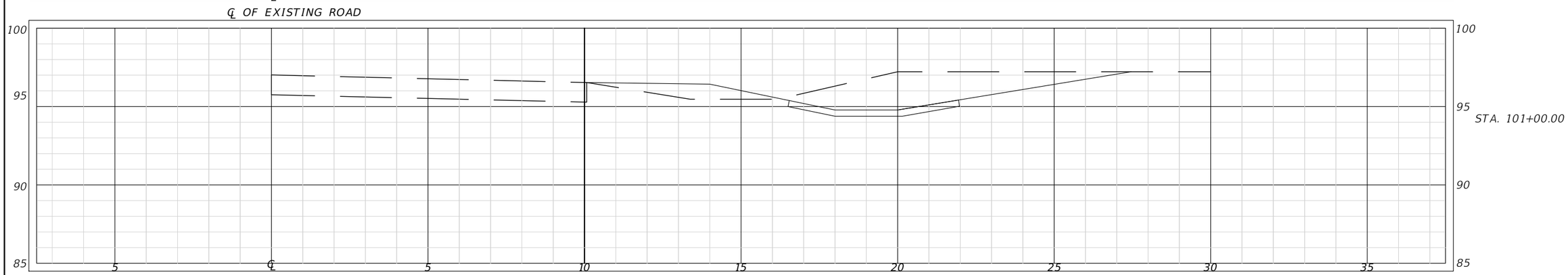

THE OFFICIAL RECORD OF THIS SHEET IS THE ELECTRONIC FILE DIGITALLY SIGNED AND SEALED UNDER RULE 61G15-23.004, F.A.C.

REVISIONS			
DATE	DESCRIPTION	DATE	DESCRIPTION

JAMES H. PITMAN, JR
P.E. LICENSE NUMBER 42035
NFPS
P.O. BOX 3823
LAKE CITY, FLORIDA 32056
CERTIFICATE OF AUTHORIZATION 29011

SUWANNEE COUNTY

ROAD NO.	COUNTY	FINANCIAL PROJECT ID
105TH ROAD	SUWANNEE	

DITCH CROSS SECTIONS

SHEET NO. 7

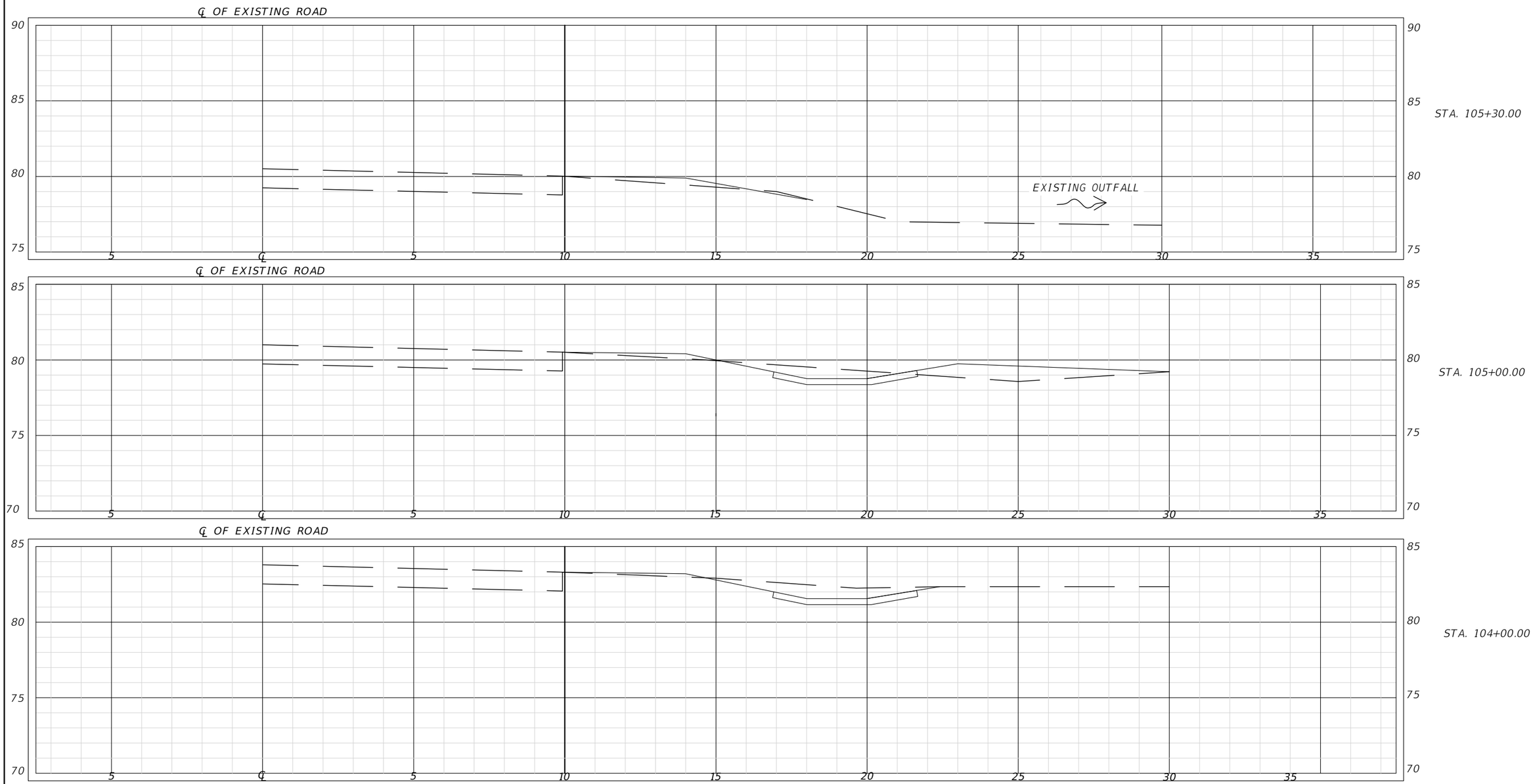

THE OFFICIAL RECORD OF THIS SHEET IS THE ELECTRONIC FILE DIGITALLY SIGNED AND SEALED UNDER RULE 61G15-23.004, F.A.C.

REVISIONS			
DATE	DESCRIPTION	DATE	DESCRIPTION

JAMES H. PITMAN, JR
P.E. LICENSE NUMBER 42035
NFPS
P.O. BOX 3823
LAKE CITY, FLORIDA 32056
CERTIFICATE OF AUTHORIZATION 29011

SUWANNEE COUNTY

ROAD NO.	COUNTY	FINANCIAL PROJECT ID
105TH ROAD	SUWANNEE	

DITCH CROSS SECTIONS

SHEET NO.
8

Ernesto Perez 2/1/2022 7:59:49 AM X:\2019\L190101SUW\H.CADD\Roadway\MODLRD01.dwg

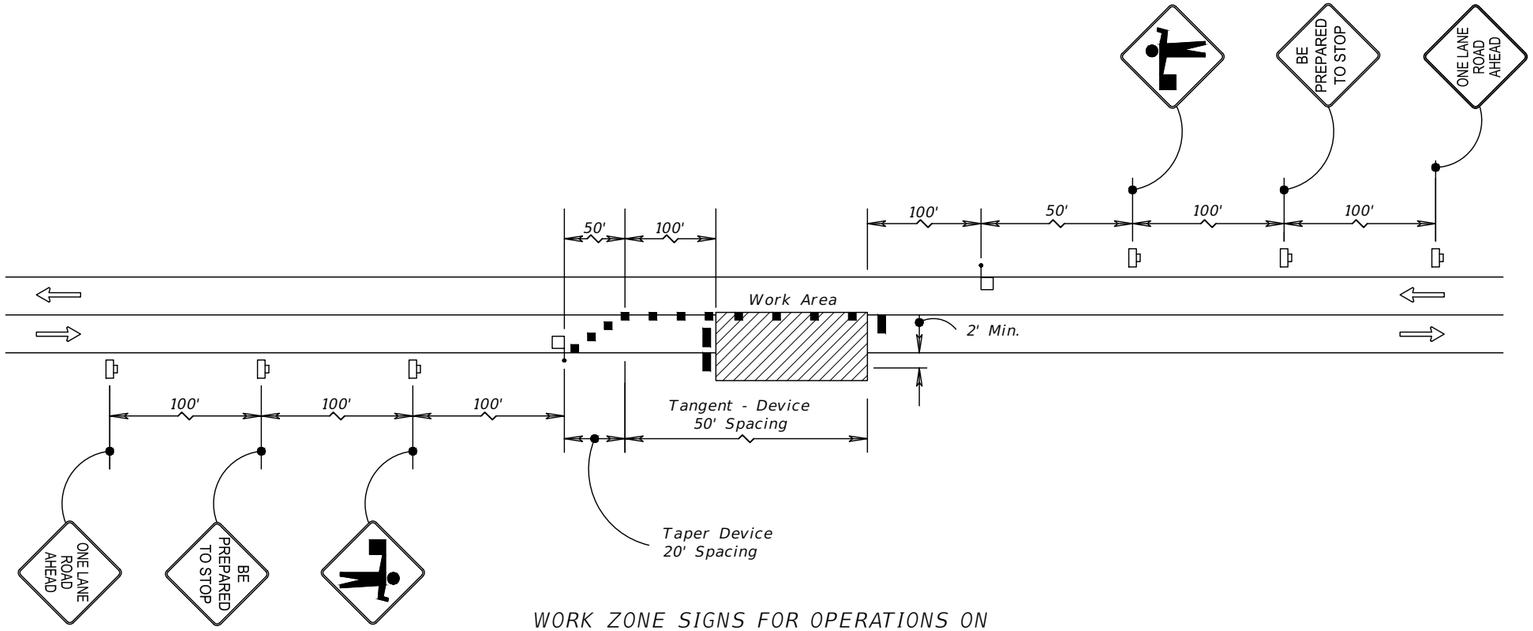

WORK ZONE SIGNS FOR OPERATIONS ON THE TRAVEL LANE OR ON THE SHOULDER

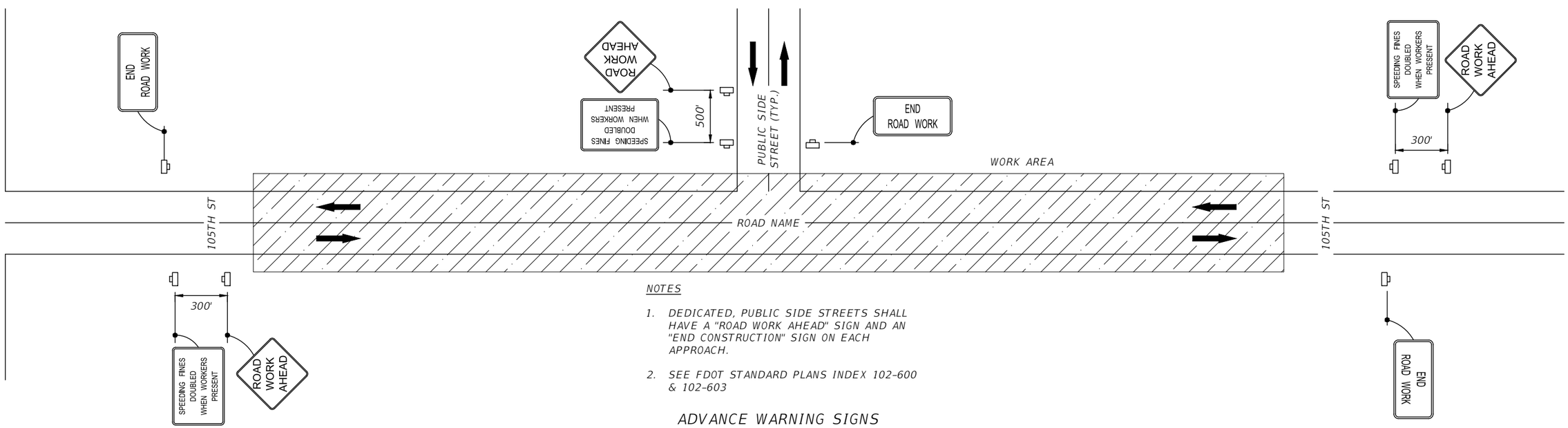

NOTES

1. DEDICATED, PUBLIC SIDE STREETS SHALL HAVE A "ROAD WORK AHEAD" SIGN AND AN "END CONSTRUCTION" SIGN ON EACH APPROACH.

2. SEE FDOT STANDARD PLANS INDEX 102-600 & 102-603

ADVANCE WARNING SIGNS

REVISIONS			
DATE	DESCRIPTION	DATE	DESCRIPTION

JAMES H. PITMAN, JR
P.E. LICENSE NUMBER 42035
NFPS
P.O. BOX 3823
LAKE CITY, FLORIDA 32056
CERTIFICATE OF AUTHORIZATION 29011

SUWANNEE COUNTY

ROAD NO.	COUNTY	FINANCIAL PROJECT ID
105TH ROAD	SUWANNEE	

TRAFFIC CONTROL PLAN

SHEET NO. 9

Ernesto Perez 2/1/2022 7:59:50 AM X:\2019\L190101SUW\H.CADD\Roadway\KEYSRD01.dwg

THE OFFICIAL RECORD OF THIS SHEET IS THE ELECTRONIC FILE DIGITALLY SIGNED AND SEALED UNDER RULE 61G15-23.004, F.A.C.